Progetto saracinesca

(12') I fili non sono pochi, per cui serve una disposizione ordinata e **test intermedi su singole parti**

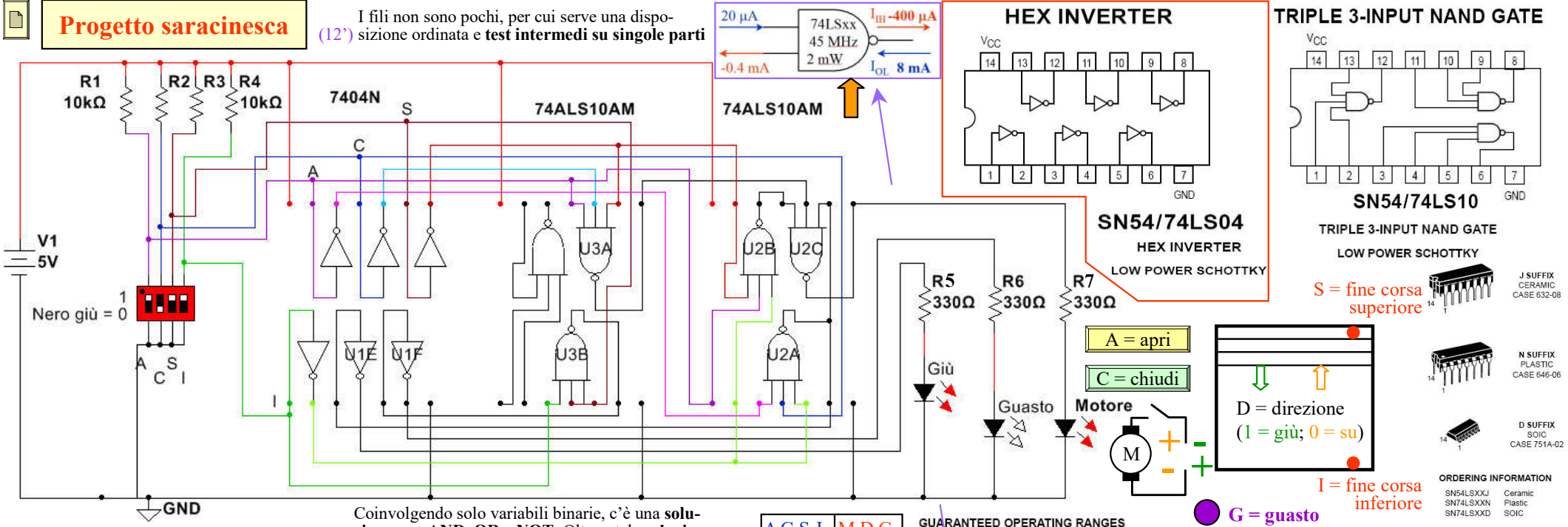

Coinvolgendo solo variabili binarie, c'è una **soluzione con AND, OR e NOT**. Oltre a tale **soluzione hardware** c'è la soluzione con un microcontrollore, che è una soluzione software perché un programma sul µC legge gli input e decide gli output. Nella soluzione con gli FPGA (Field Programmable Gate Array) si scrive un software che diventa un hardware

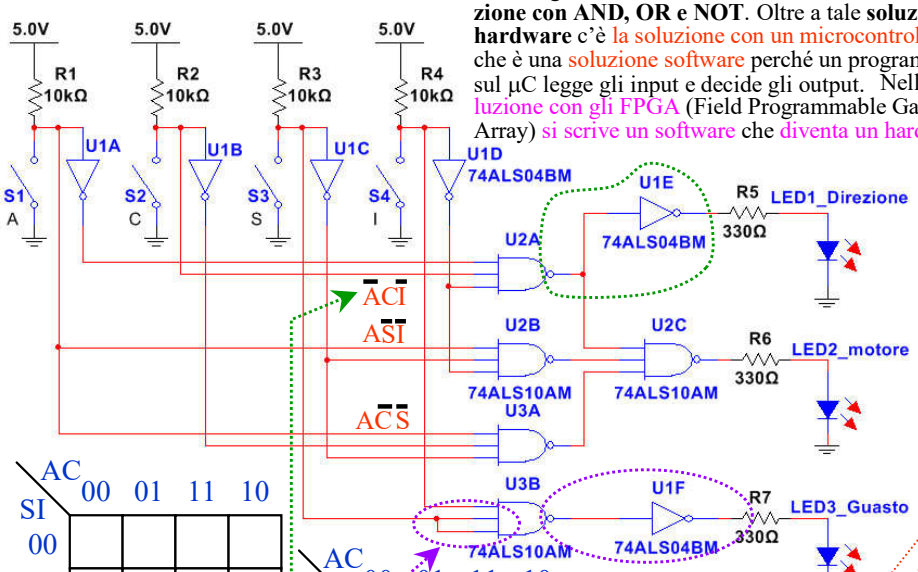

	A C S I	M D G
0	0 0 0 0	0 0 0
1	0 0 0 1	0 0 0
2	0 0 1 0	0 0 0
3	0 0 1 1	0 0 1
4	0 1 0 0	1 1 0
5	0 1 0 1	0 0 0
6	0 1 1 0	1 1 0
7	0 1 1 1	0 0 1
8	1 0 0 0	1 0 0
9	1 0 0 1	1 0 0
10	1 0 1 0	0 0 0
11	1 0 1 1	0 0 1
12	1 1 0 0	1 0 0
13	1 1 0 1	0 0 0
14	1 1 1 0	0 0 0
15	1 1 1 1	0 0 1

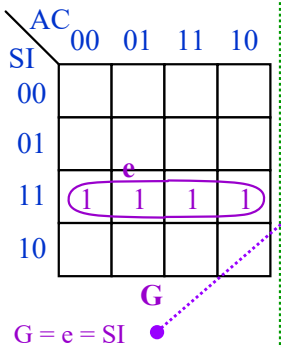

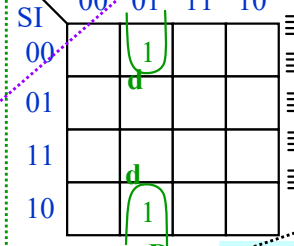

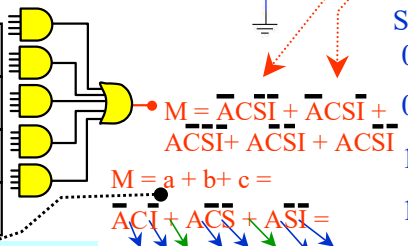

$M = \overline{A}C\overline{S}\overline{I} + \overline{A}C\overline{S}\overline{I} + \overline{A}\overline{S}\overline{I} + \overline{A}C\overline{S}\overline{I} + \overline{A}C\overline{S}\overline{I}$

$M = a + b + c =$

$\overline{A}C\overline{I} + \overline{A}C\overline{S} + \overline{A}\overline{S}\overline{I} =$

$(A/C/I)/(A/S/I)/(A/C/S)$

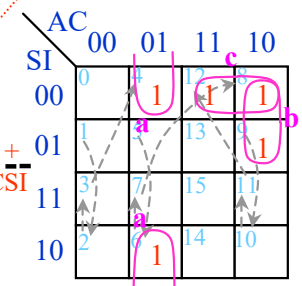

GUARANTEED OPERATING RANGES

Symbol	Parameter		Min	Typ	Max	Unit
V_{CC}	Supply Voltage	54 74	4.5 4.75	5.0 5.0	5.5 5.25	V
T_A	Operating Ambient Temperature Range	54 74	−55 0	25 25	125 70	°C
I_{OH}	Output Current — High	54, 74			−0.4	mA
I_{OL}	Output Current — Low	54 74			4.0 8.0	mA

DC CHARACTERISTICS OVER OPERATING TEMPERATURE RANGE (unless otherwise specified)

Symbol	Parameter		Limits Min	Limits Typ	Limits Max	Unit	Test Conditions	
V_{IH}	Input HIGH Voltage		2.0			V	Guaranteed Input HIGH Voltage for All Inputs	
V_{IL}	Input LOW Voltage	54			0.7	V	Guaranteed Input LOW Voltage for All Inputs	
		74			0.8			
V_{IK}	Input Clamp Diode Voltage			−0.65	−1.5	V	V_{CC} = MIN, I_{IN} = −18 mA	
V_{OH}	Output HIGH Voltage	54	2.5	3.5		V	V_{CC} = MIN, I_{OH} = MAX, V_{IN} = V_{IH} or V_{IL} per Truth Table	
		74	2.7	3.5		V		
V_{OL}	Output LOW Voltage	54, 74		0.25	0.4	V	I_{OL} = 4.0 mA	V_{CC} = V_{CC} MIN, V_{IN} = V_{IL} or V_{IH} per Truth Table
		74		0.35	0.5	V	I_{OL} = 8.0 mA	
I_{IH}	Input HIGH Current				20	µA	V_{CC} = MAX, V_{IN} = 2.7 V	
					0.1	mA	V_{CC} = MAX, V_{IN} = 7.0 V	
I_{IL}	Input LOW Current				−0.4	mA	V_{CC} = MAX, V_{IN} = 0.4 V	
I_{OS}	Short Circuit Current (Note 1)		−20		−100	mA	V_{CC} = MAX	
I_{CC}	Power Supply Current Total, Output HIGH Total, Output LOW				1.2 3.3	mA	V_{CC} = MAX	

Note 1: Not more than one output should be shorted at a time, nor for more than 1 second.

AC CHARACTERISTICS (T_A = 25°C)

Symbol	Parameter	Limits Min	Limits Typ	Limits Max	Unit	Test Conditions
t_{PLH}	Turn-Off Delay, Input to Output		9.0	15	ns	V_{CC} = 5.0 V C_L = 15 pF
t_{PHL}	Turn-On Delay, Input to Output		10	15	ns	